Technical Bulletin

HYDE™
Industrial Blade Solutions

Industrial Blade & Knife Terminology

For this glossary, the terms blade and knife are interchangeable.

Alloy Steel - A mixture of metal with at least one element that offers increased hardness and/or stain-resistance when joined with materials such as carbon, chromium, molybdenum, nickel, and vanadium.

Arbor - The shaft on which a circular blade or knife turns; also called a mandrel.

Arbor Hole - Also known as the center hole, this is the hole in the center of a blade through which it is placed on the arbor, which in turn drives the blade. Center holes can come in many different shapes and configurations, such as slab sided or with keyways. (see Dia. #1)

Babbitt Slots - Found on many machine knives, these slots allow Babbitt metal to be cast in place in order to properly "shim" or position the knife in its holder. (see Dia. #5)

Back - This is the unsharpened part of a straight knife, opposite the cutting edge. (see Dia. #5)

Beam Strength - The resistance a straight blade or knife has to back deflection when subjected to the edge thrust of feed pressure.

Bevel or Bevel Edge - The portion of the blade that slopes from its body toward the edge of the blade, typically formed by grinding. (see Dia. #1 and #5)

Bevel Side - On a blade with a single bevel, it's the flat side with the bevel.

Bevel Width - The distance from the point on the blade body where the bevel begins to the blade edge. (see Dia. #1)

Blade - The flat part of a tool that has a cutting edge and/or pointed end typically made of steel. A blade is used to cut, slice, scrape, shear or trim an object.

Blade Tension - For circular blades, it is the pre-stretching of the inner area of the blade to produce a state of tension on blade's rim. Alternatively, this is the direct pull (in pounds) on the blade (typical of bandsaw blades and hacksaw blades).

Blade Width - The distance from the tip of the tooth to the back edge of the blade.

Bolt Circle - For a round blade, this is the circle drawn through the centers of any bolt holes. This information is typically found on the blade's prints. (see Dia. #1)

Bolt Slots - Slots cut in the knife body through which mounting bolts are placed to secure the knife to a machine. Can be "internal" (totally contained in the body of the knife) or can be "open" (incorporated into the back edge of the knife). (see Dia. #5)

Bore Holes - Holes that are put into a blade body either to provide drive for the blade or for locating the blade properly on a machine. Bore holes include arbor or center holes, drive holes and pinholes.

Burr - A raised and curled lip of metal that forms on the edge of a blade during sharpening. Burr always forms on the oppotise side of the sharpened side of the edge, and is typically visible or detectable with a fingertip.

HYDE™ Industrial Blade Solutions
54 Eastford Rd., Southbridge, MA 01550 • www.hydeblades.com
Ph: 800-872-4933 or 508-764-4344 • Fax: 508-764-8172 • info@hydeblades.com

Industrial Blade & Knife Terminology (con't)

For this glossary, the terms blade and knife are interchangeable.

Camber - An arcing or bending of the back or cutting edge of the saw blade. In positive camber the cutting edge arcs backward; in negative camber the cutting edge arcs forward.

Carbide - A particularly hard metal compound that holds a sharp edge for long periods of time. There are various standards of carbide in different strengths.

Carbon or Carbon Steel - Carbon is the element that transforms iron into steel. A steel blade with a high carbon content gains in hardness and the ability to retain a sharp edge, but is more vulnerable to corrosion and staining. A knife blade with more chromium than carbon will be stainless, but also sacrifices some of its performance values.

Center Hole - Also known as the arbor hole, this is the hole in the center of a blade through which it is placed on an arbor, which in turn drives the blade. Center holes can come in many different shapes and configurations, such as slab sided or with keyways. (see Dia. #1)

Chatter - A rumbling sound heard in a machine, caused by trying to take too heavy a cut with the blade or knife. The sound comes from overloading the machine.

Chip - A small fragment of material removed by each tooth on the cutting edge.

Chip Clearance - The gullet area between two teeth.

Chisel Ground - A bevel grind characterized by a sharp bevel angle, and can refer to a single bevel or a double bevel grind.

Chromium - An element that improves blade or knife hardenability, wear and corrosion resistance.

Circular Blades – Also known as rotary blades, these are industrial blades that are circular in shape and perform cutting through the action of their rotation.

Coatings - Compounds that are applied to the outer body of a blade in order to enhance certain physical properties. Teflon is added to increase lubricity, TiN coating increases wear resistance, etc.

Code End - The right edge of a machine knife, used as the base point for measurements. (see Dia. #5)

Compound Bevel - Two bevels are applied to a side of the blade, with differing angles. The secondary bevel is typically a steeper angle than the primary bevel.

Concentricity - Also referred to as peripheral runout, this is a measure of the centricity of the arbor hole or center hole. A blade that is not concentric will "hop" when its run. The truer the center hole, the truer the blade will run, assuring even wear and consistent cutting results. (see Dia. #3)

Corrosion Resistance - A blade's ability to resist rust, which is the result of exposure to the environment or elements.

Custom-shaped Knives or Blades – Blades with intricate shapes that do not fall fully into the range of circular or straight blades. Many cut-off blades and hand knives feature custom-shaped blades.

Cutting Rate - The speed at which the cross sectional area of the work piece is cut, expressed in square inches of cutting per minute.

Industrial Blade & Knife Terminology (con't)

For this glossary, the terms blade and knife are interchangeable.

Double Bevel With Land - A blade that has a double bevel where a small flat is maintained at the edge of the blade.

Double Bevel - Blades can have bevels ground on both sides of the blade, and these are known as double bevel blades. (see Dia. #4 and #6)

Drive Holes - Also called pinholes, these are holes cut into the body of a circular blade through which pins are inserted in order to drive the blade in use. (see Dia. #1)

Ductility - A blade's ability to flex, bend or take an impact without fracturing.

Edge - The sharpened or cutting side of a blade. An edge may be serrated or scalloped, and some knives feature two edges rather than one.

Edge Retention - A measure of a blade's ability to hold an edge by resisting abrasion and wear.

Expansion Slots - Slots cut into the body of a blade that allow the body to expand and contract under load and heat and to prevent twisting or warpage.

Face - On a blade with a single bevel, it's the widest side, opposite the bevel side. (see Dia. #5)

Feed - Refers to rate of linear advance of the blade or knife through the workpiece and is measured in inches per minute/millimeters per minute or sometimes feed per tooth or feed per revolution (for circular blades). Feed often also refers to the pressure exerted against the cutting edge of a blade, typically expressed in pounds.

Fine Blanking - An advanced blanking process used to press knife blades out of a coil of steel using a specifically shaped die, producing consistently accurate parts that require little additional machining.

Flat Grind or Straight Grind - Refers to a blade design where the sides are parallel, therefore the cutting width or kerf remains the same as the blade is reground.

Flat Ground - Refers to a design where the sides of a blade are ground flat and perfectly perpendicular to the cutting edge. These blades are typically used to make shearing type cuts. As the blade is reground, the overall cutting width remains constant.

Fleam Ground - The angle of the faces of a blade's teeth are ground relative to a line perpendicular to the face of the saw.

Gage - The thickness of the blade.

Guard - A separate metal piece attached at the juncture of a hand blade and its handle, to prevent the hand from slipping onto the blade while cutting.

Gullet - The space within the curved area between two teeth on a blade.

Gullet Depth - The distance from the tip of a tooth to the bottom of the gullet.

Hardenability – The ability of a steel to be hardened (through heat treatment or other means).

Industrial Blade & Knife Terminology (con't)

For this glossary, the terms blade and knife are interchangeable.

Machine Knives - A term that covers a wide range of blades and knives found in cutting machinery, typically intended for industrial or repetitive use, rather than household or infrequent use.

Manufacturability - The ease in which steel can be machined, blanked, ground and heat-treated.

Molybdenum - An element added to steel to improve hardenability, tensile strength and resistance to corrosion and pitting.

Nickel - An alloy addition that improves steel's toughness, hardenability and corrosion resistance.

Notched Blades – Also referred to as toothed blades, these blades have notches of various angles and pitches cut along the edge of the blade. The shape of the notch depends on its purpose – pointed notches are suitable to grab and puncture slick or stretchy material while shallower notches are suitable for cutting spongy, soft materials without crushing them.

Peripheral Runout - Also referred to as concentricity, this is a measure of the centricity of the arbor hole or center hole. A blade that has peripheral runout will "hop" when its run. The truer the center hole, the truer the blade will run, assuring even wear and consistent cutting results. (see Dia. #3)

Physical Properties - Refers to such things as hardenability, ductility and toughness, which are established by the particular chemistry of the steel and the proper heat-treat process.

Pin Holes - Also called drive holes, these are holes cut into the body of a circular blade through which pins are inserted in order to drive the blade in use. (see Dia. #1)

Pitch - Is the number of teeth per inch on a straight blade. For circular blades, pitch is measured circumferentially, between adjacent teeth (pitch = Pi x diameter / number of teeth).

Plate - Flat sheets of steel that are formed into knives or blades through blanking, punching, milling or laser cutting.

Pointed Blades – Blades that have serrations or teeth cut into the working edge.

Points - The tips of teeth on a knife or blade.

Primary Bevel - For a double bevel blade, this is the first bevel applied to the blade. It starts closest to the center and is the shallower bevel. (see Dia. #4 and #6)

Rake or Rake Angle - Refers to the inclination of the tooth face, upon which the chip impinges, measured perpendicularly to the direction of motion of the tooth. Rake may range from positive, where the tooth angles forward in the direction of the cutting action, through zero to negative, where the tooth angles backward from the direction of the cutting action.

Rockwell Hardness Scale – A nondestructive test scale for measuring steel indentation hardness by depressing a diamond crystal into a piece of steel. Rc value is measured by the penetration depth of a diamond crystal tip into the steel with a large load and comparing it to preload force penetration. Generally, the higher a blade's hardness, the better its wear resistance (and increased brittleness).

Industrial Blade & Knife Terminology (con't)

For this glossary, the terms blade and knife are interchangeable.

Rotary Blades – Also known as circular blades, these are industrial blades that are circular in shape and perform cutting through the action of their rotation.

Scalloped Blades or Scallop Edged Blades – Have edges that can be described as wavy looking. Blades of this type offer a clean slicing action. They can be used in a wide variety of cutting machines, as well as a number of cutting applications.

Secondary Bevel - For a double bevel blade, this is the second bevel applied to the blade. It starts closest to the blade's edge and is the steeper bevel. (see Dia. #4 and #6)

Serrated Blades – Have numerous small points along the cutting edge which come into contact with material being cut. Compared to smooth blades, serrated blades have less contact area. However, the amount of force applied at each contact point is actually greater than that realized with smooth blades, and the contact points are at sharper angles in relation to the material being cut. Serrated blades create cuts that are less smooth and less precise than other blades. They are also harder to sharpen. That said, they cut longer when they dull and sawing-type cuts are easier with serrated blades.

Set - The bending of teeth on a blade to the left and/or right of center. The setting of teeth enables a blade to cut straighter, to clear the chips from the kerf, and to allow the back of the band to clear the cut and not bind.

Side Clearance - The difference in dimension between the cutting edge of a blade and the back of the blade. Side clearance provides space that allows the blade body to follow through the cut without binding in the cut.

Side Runout - A measure of the flatness of a blade. A blade that has side runout - that is not flat - will "wobble" when its run. The flatter a blade is, the less wobble users will encounter. (see Dia. #3)

Single Bevel With Land - A blade that has a single bevel where a small flat is maintained at the edge of the blade, running from the end of the bevel to the back of the blade. (see Dia. #4 and #6)

Slot Depth - the depth of a mounting slot in the back edge of a straight blade, measured from the back edge of the blade to the end of the slot. (see Dia. #5)

Slot Width - the width of a mounting slot in a straight blade, measured from one side of the slot to the other side of the slot. (see Dia. #5)

Speed - The rate at which a blade runs, normally measured in surface feet per minute (sfpm) or surface meters per minute (smpm).

Stainless Steel - A steel alloy with high (12% or more) of chromium. Generally the more chromium a particular alloy contains, the more rust or stain resistant it is, making it very useful in applications where rust is unwelcome (i.e. food processing and medical applications).

Straight Blades – These are industrial blades that are rectangular in shape, with a straight cutting edge, and perform cutting either through a reciprocating action or a chopping action.

Strength - The inherent ability of a steel to resist applied forces.

Industrial Blade & Knife Terminology (con't)

For this glossary, the terms blade and knife are interchangeable.

Strippage - When one or more teeth or serrations are pulled from or break off a blade.

Tang - Is the part of a hand or machine blade that extends into a handle (for hand knives) or a clamp assembly (for machine knives). For hand knives, a full tang blade extends down the entire handle; a half tang blade does not and is more likely to break under stress.

Teeth - Small sharp points along the cutting edge of a blade.

Teeth Per Inch (T.P.I.) - A common measurement of the teeth on a straight blade, measured by counting the number of teeth per inch.

Tempering - The final step in the heat-treat process which improves a blade's toughness.

Tensile Strength - The ability of a blade to resist breaking.

Thickness - Also known as the gage, this is the thickness of the blade, from one face to the other face.

Tooth Back - The surface of a tooth opposite the tooth face.

Tooth Face - The surface of a tooth on which the chip is formed.

Tooth Loading or Clogging - The condition where chips or melted workpiece material fill a tooth's gullet and become compacted and welded in place.

Tooth Pitch - The distance from the tip of one tooth to the tip of the next tooth.

Tooth Tip - The cutting edge of the tooth.

Toothed Blades – Have "teeth" of various angles and pitches cut along the edge of the blade. The shape of the tooth depends on its purpose – pointed teeth are suitable to grab and puncture slick or stretchy material while shallower teeth are suitable for cutting spongy, soft materials without crushing them.

Toughness - A blade's ability to absorb energy by impact prior to fracturing.

Twist - A condition where a blade is not flat or straight - the blade has twist in it. The tendency of a blade to bend or spiral after use.

Upper Blades – Are used in conjunction with a lower blade to shear or cut various materials.

Vanadium - A material added to steel to improve hardenability and promote fine grain, which is an important factor in wear resistance.

Industrial Blade & Knife Terminology (con't)

For this glossary, the terms blade and knife are interchangeable.

Hardness - An indicator of a blade's ability to hold an edge. A blade's hardness is typically measured on the Rockwell "C" scale.

Heat-Treat - A multi-step process used to impart favorable properties into a blade, such as toughness.

High-Carbon - Any steel with .5% Carbon or more.

High-Speed Steel - A family of steels designed to machine other steels. Tools made from high-speed steel will hold an edge even when heated red hot by friction, and also offer very high wear resistance.

Hollow Ground or Taper Ground - Refers to a design where the sides of a blade are tapered at a slight angle (typically 5 to 10 minutes of angle) to provide side clearance for the blade body in the cut. As the blade is reground, the overall cutting width is reduced.

Hone - The term for the act of sharpening a knife with a sharpening stone or other medium.

Included Angle - For a blade with a double bevel, where both bevels are to the same angle, the combination of the two angles is called the included angle (i.e. if a double bevel blade has an included angle of 20°, that would indicate angles of 10° on each side). (see Dia. #1)

Industrial Blades – A term that covers a wide range of blades and knives, typically intended for industrial or repetitive use, rather than household or infrequent use. Most often industrial blades are machine blades, but they can also be hand blades or mill blades.

Initial Sharpness - The sharpness of the blade right "out of the box" (and the sharpness that is the goal when re-sharpening).

Kerf - The width of a blade's cut, or the slot made by a blade when parting material.

Keyway - A slot added to the arbor hole of a circular blade. Typically a mating slot is cut into the machine arbor. As the blade is mounted on the machine arbor, a key is slid into place to lock the blade on the arbor, which helps to hold the blade in place and apply drive to the blade when it is run. Typical configurations include square base and round base keyways. (see Dia. #2)

Knife Holders – Devices used to hold, secure or fixture knives in a machine.

Laser Cutting - A process where a laser is used to cut out blades to a specified shape from sheets or plates of steel.

Left Hand and Right Hand - When a knife is laid on its face with the bevel side up and away from the viewer, the most prominent feature determines if the knife is left hand or right hand (i.e. it angles off to one side or has a bend on one side).

Load - The "feed per tooth" on a toothed blade.

Lower Blades – The bottom knife in a two knife arrangement utilized to cut thin plastic sheets.

Industrial Blade Solutions

Industrial Blade & Knife Terminology (con't)

For this glossary, the terms blade and knife are interchangeable.

Anatomy of a Circular Blade or Knife (Diagram #1)

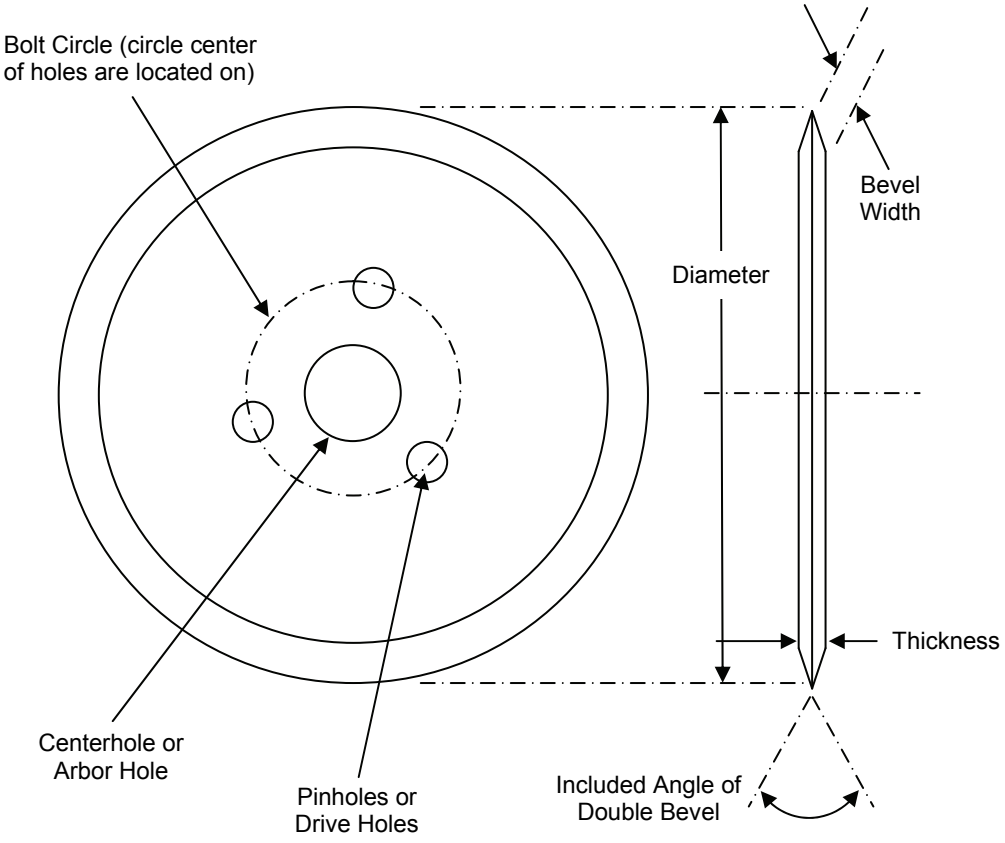

Some Common Center Hole Configurations (Diagram #2)

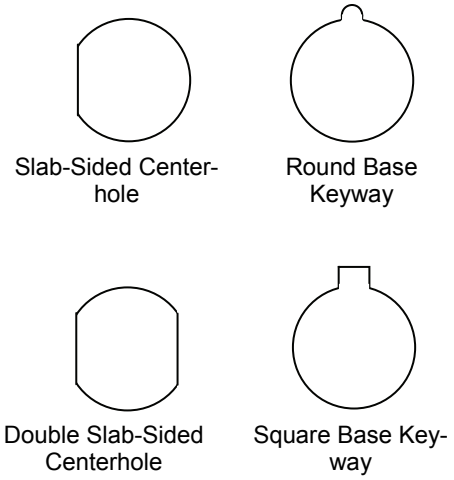

Industrial Blade & Knife Terminology (con't)

For this glossary, the terms blade and knife are interchangeable.

Measuring Run-out for a Circular Blade or Knife (Diagram #3)

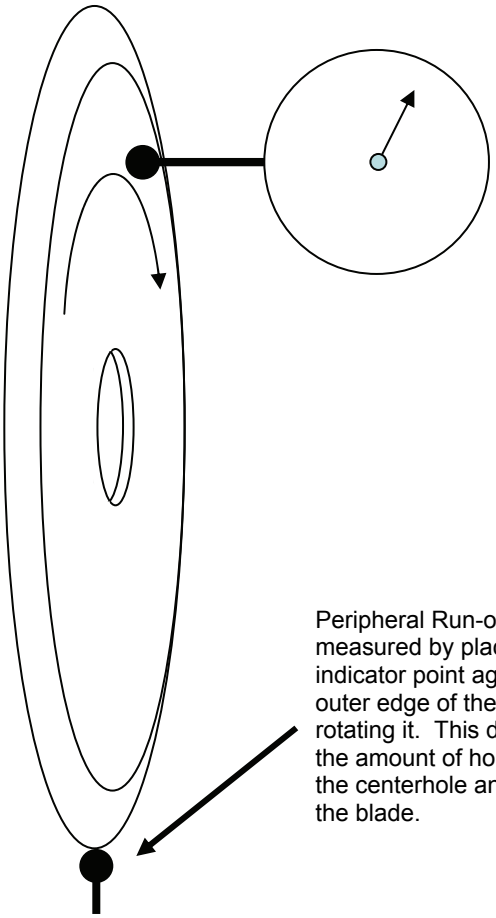

Side Run-out is measured by mounting a blade on an arbor, placing a dial indicator point against the side of the blade (about 1/3 the distance from the edge), and rotating the blade to determine how much side wobble the blade has.

Peripheral Run-out is measured by placing a dial indicator point against the outer edge of the blade and rotating it. This determines the amount of hop between the centerhole and O.D. of the blade.

Common Bevel Configurations for Circular Blades/Knives (Diagram #4)

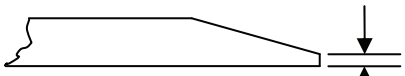

Single Bevel w/ Land (Flat) – can be supplied w/o Land

Single Bevel w/ Secondary Bevel

Double Bevel w/ Land – can be supplied w/o Land

Double Bevel w/ Secondary Bevel

Technical Bulletin

HYDE™
Industrial Blade Solutions

Industrial Blade & Knife Terminology (con't)

For this glossary, the terms blade and knife are interchangeable.

Anatomy of a Straight Blade or Knife (Diagram #5)

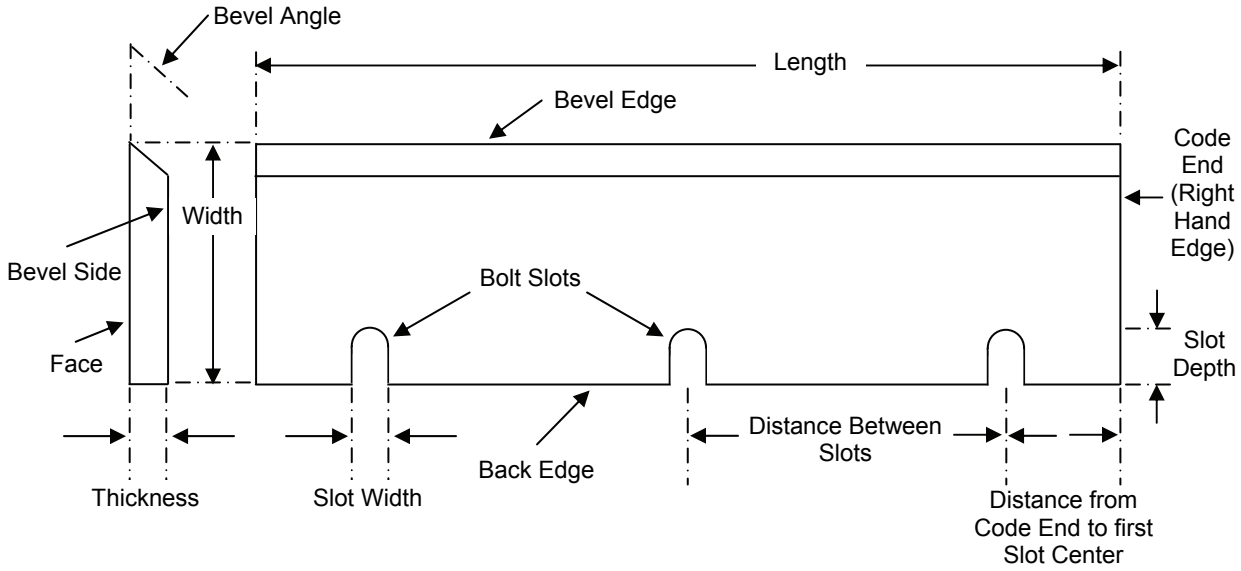

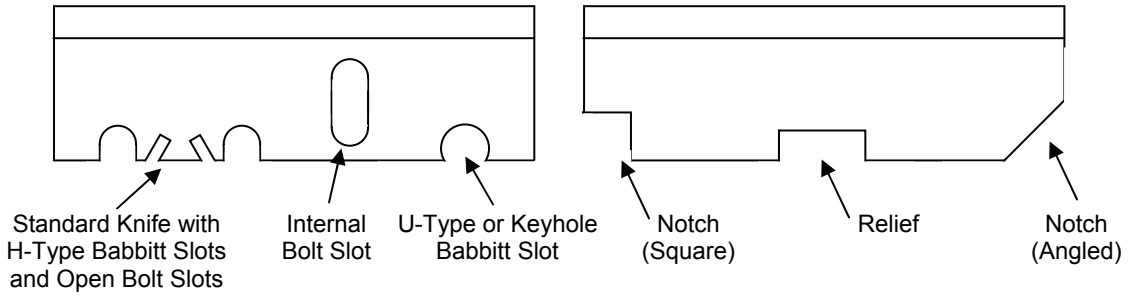

Common Bevel Configurations for Straight Blades/Knives (Diagram #6)